031067

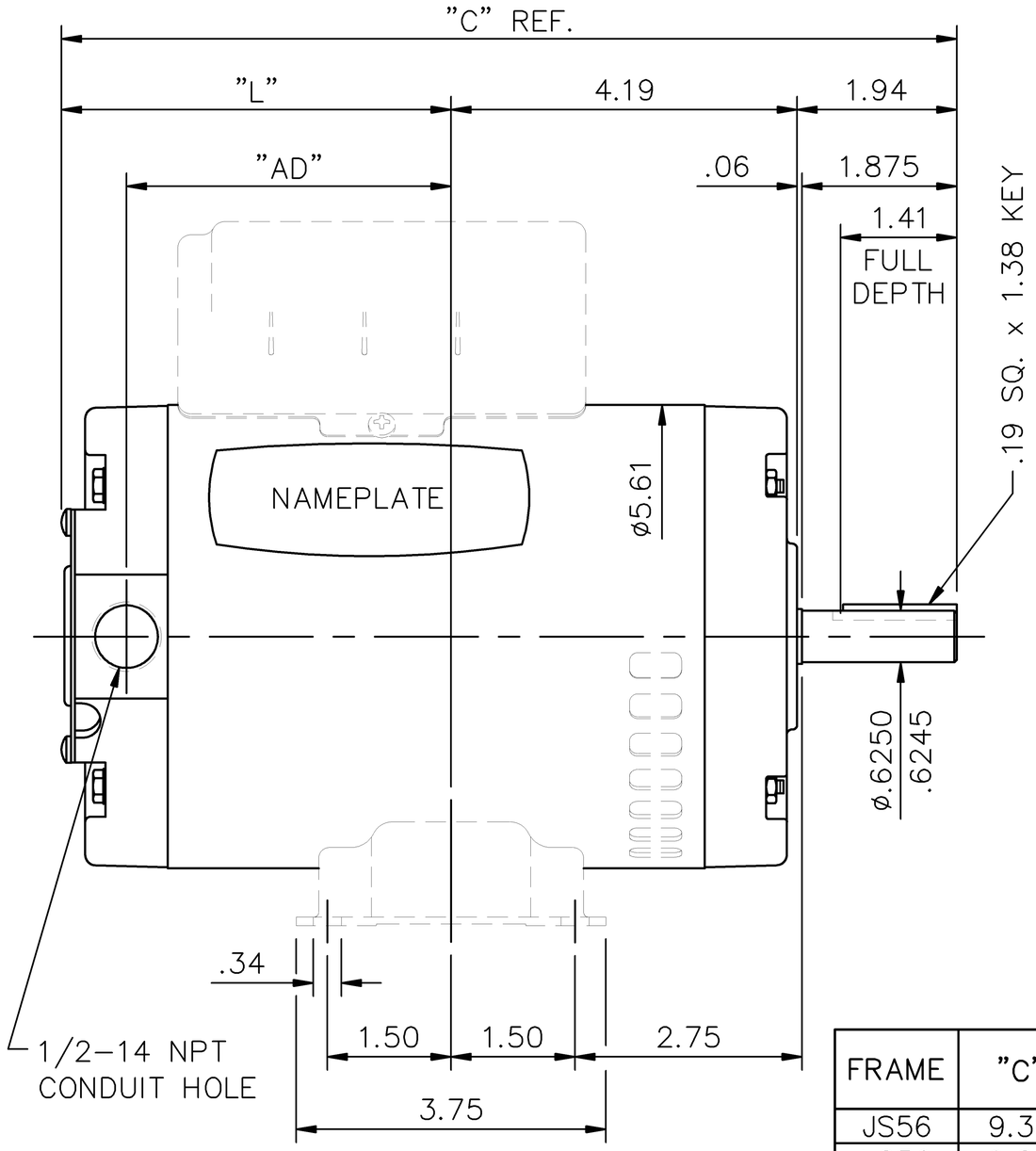

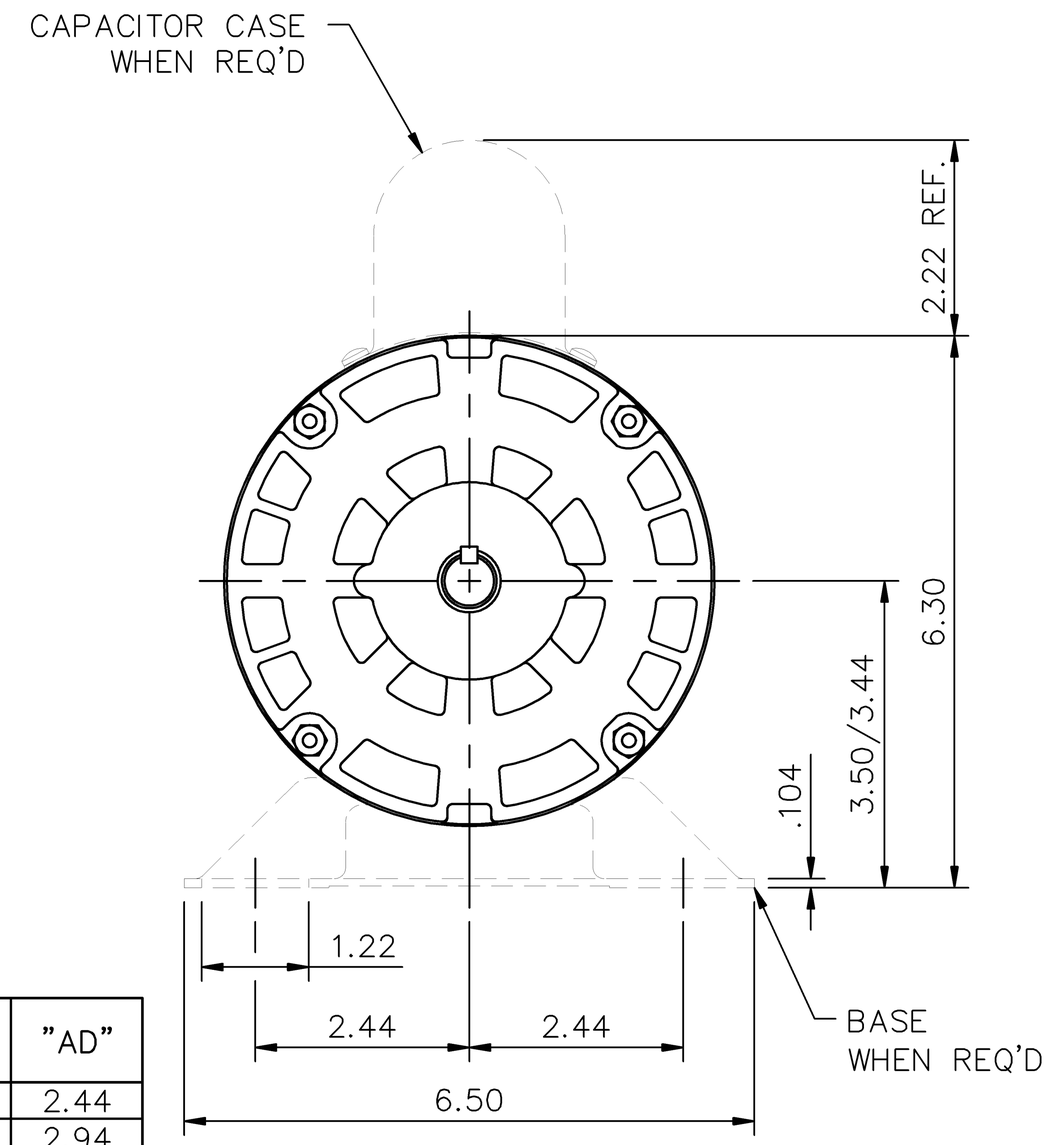

FRAME	"C"	"L"	"AD"
JS56	9.38	3.25	2.44
LS56	9.88	3.75	2.94
NS56	10.38	4.25	3.44
PS56	10.63	4.50	3.69
RS56	10.88	4.75	3.94
US56	11.38	5.25	4.44

NO.	REVISION	BY	DATE
01	REDRAWN TO CAD DWF	BJB	02/23/01

TOLERANCES UNLESS OTHERWISE SPECIFIED

DECIMALS	
.00	± .01
.000	± .005
.0000	± .0005
FRACTIONS	± 1/64
ANGLES	± 1/2°
INCH/MM	

LEESON ELECTRIC CORPORATION

DRAWN SAW 05/06/94
CH'K'D. TCB 05/19/94
APPR. PG 05/19/94
SCALE 1=1
REF. 031067
FMF 102489

TITLE OUTLINE – S56 FRAME
OPEN DRIP PROOF – RIGID

MAT'L.

FINISH STANDARD

SIZE A

DRAWING NO. 031067

THIS DRAWING IN DESIGN AND DETAIL IS OUR PROPERTY
AND MUST NOT BE USED EXCEPT IN CONNECTION WITH OUR WORK
ALL RIGHTS OF DESIGN AND INVENTION ARE RESERVED